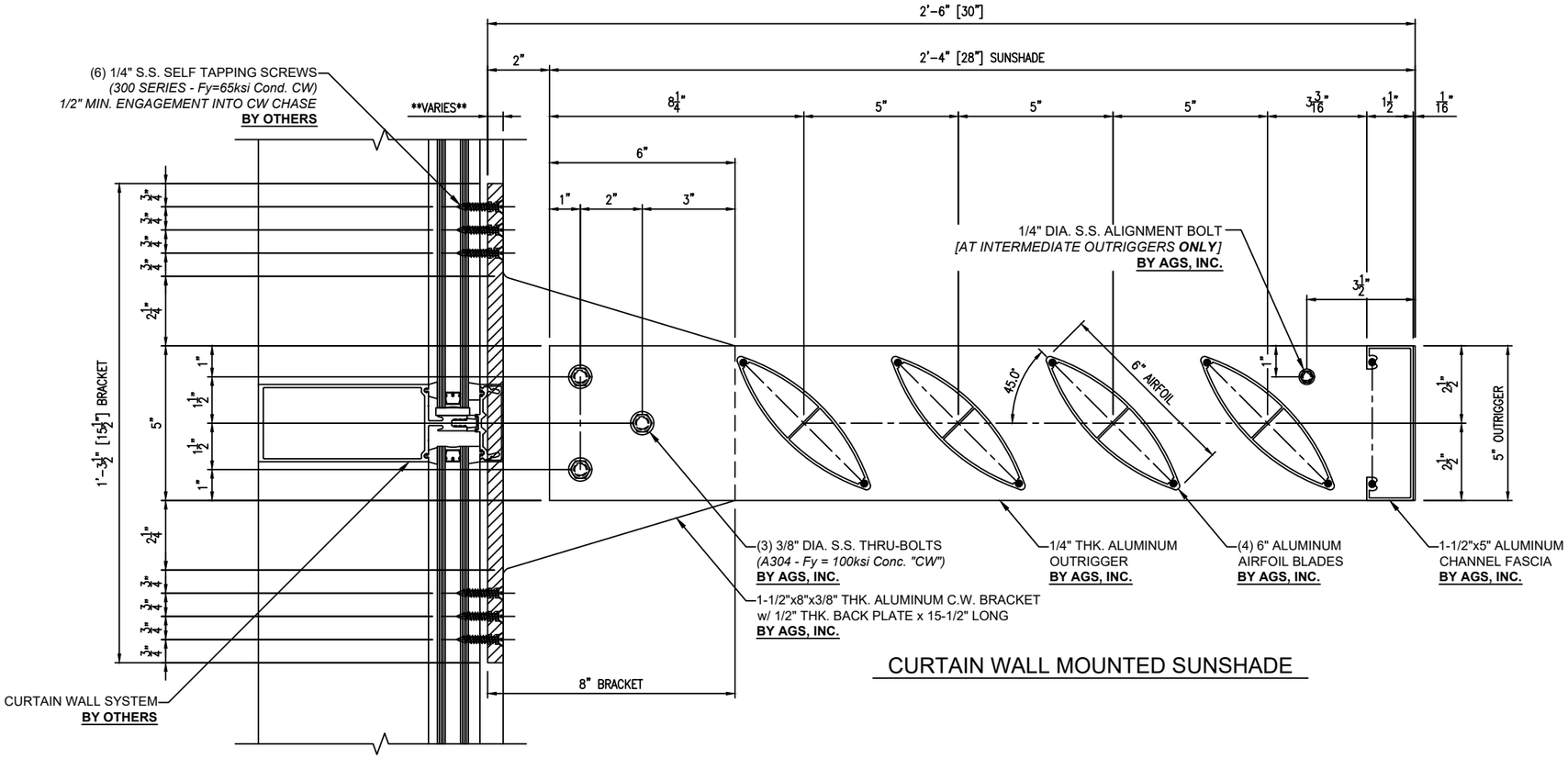

CURTAIN WALL MOUNTED SUNSHADE

ENGINEER OF RECORD VERIFY WALL CAN SUPPORT SUNSHADE LOADS:

DESIGN LOAD: 57 psf

GROUND SNOW LOAD: 50 psf
-See maps where these calculations do not apply.

WIND SPEED: 120 mph
-See maps where these calculations do not apply.

ANCHORAGE IS BASED ON 30" PROJECTION.

MAXIMUM LENGTH OF SUNSHADE: 60"

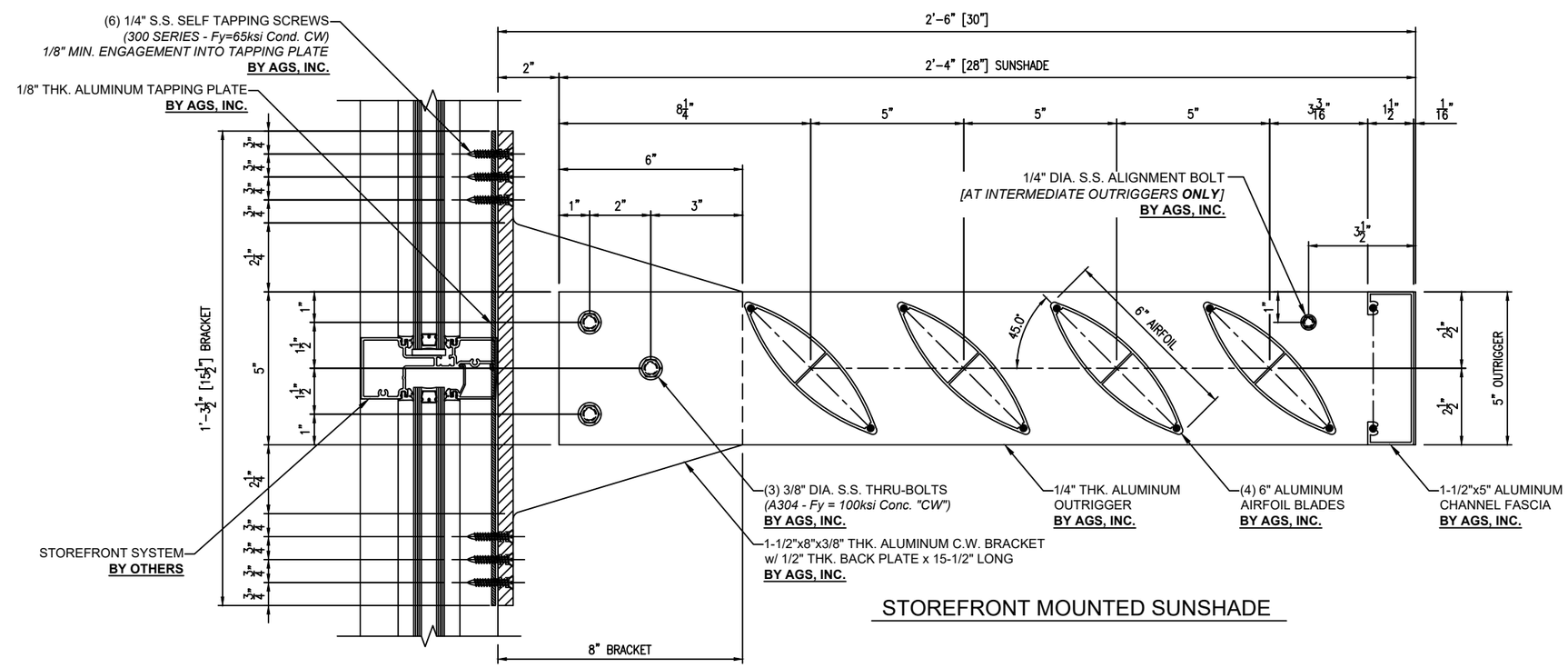

STOREFRONT MOUNTED SUNSHADE

WEXFORD QUICK SHIP

REV. NO.	DATE	BY
5		
4		
3		
2		
1		

AGS Inc.
22442 S. Fey Drive
Frankfort, IL 60423
Ph: (708) 479-9458 Fax: (708) 479-9478
www.agsshade.com
Architectural Grilles & Sunshades, Inc.

PROJECT NAME:
LOCATION:
ARCHITECT:
LOCATION:
CONTRACTOR:
LOCATION:
REPRESENTATIVE:
LOCATION:
AGS, INC. PROJECT MANAGER:

SHEET NAME
SUNSHADE SECTION SHEET

JOB NUMBER

FINISH

SCALE: 6" = 1'-0"
DATE
DRAWN BY: JRW
SHEET NO.: 01-02

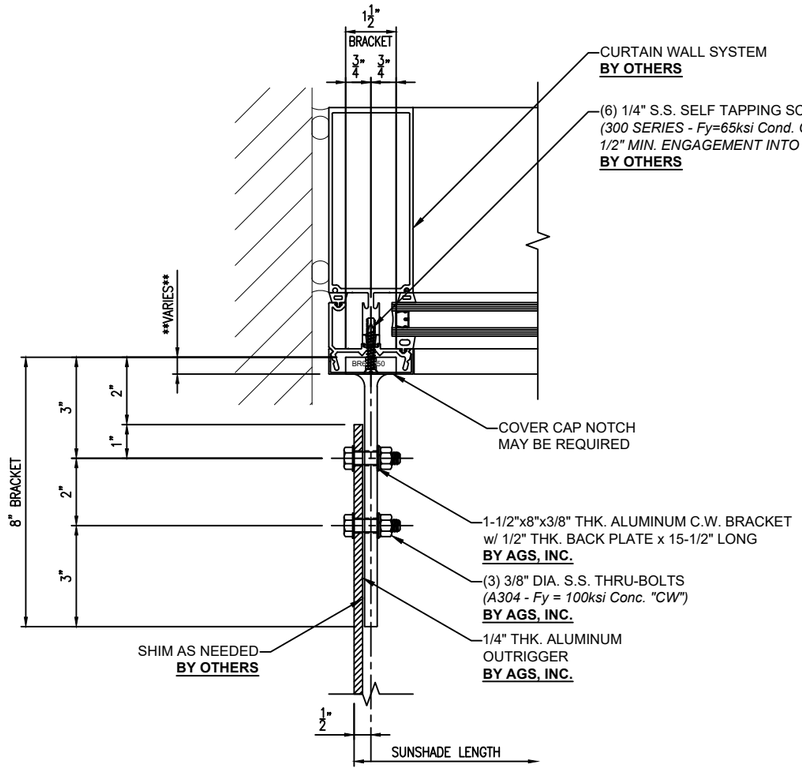

CURTAIN WALL ATTACHMENT

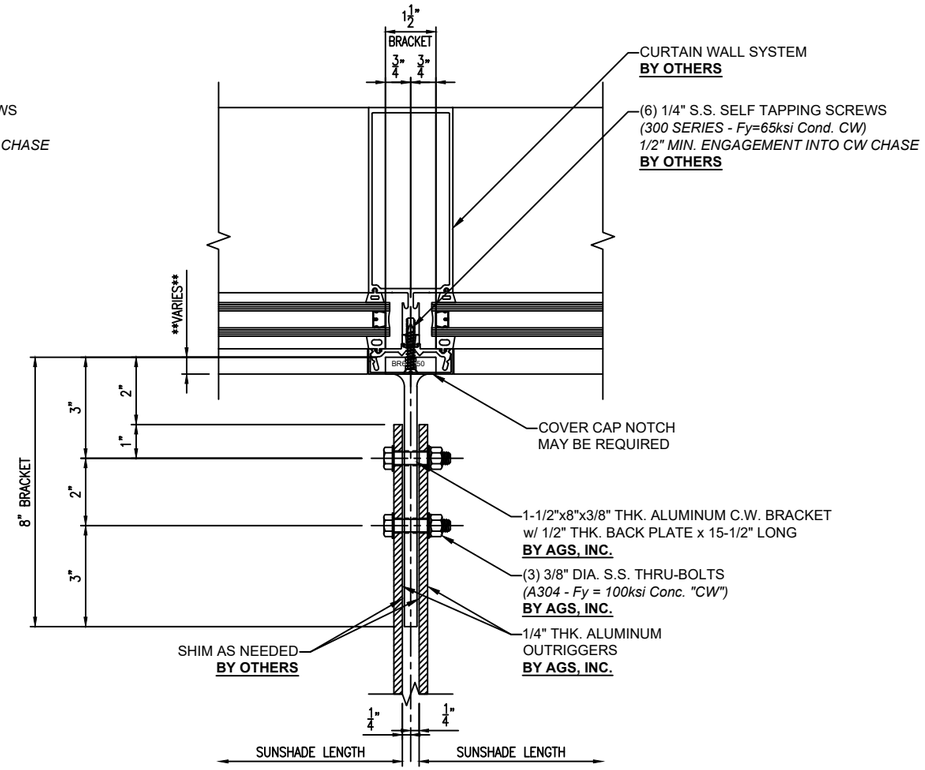

CURTAIN WALL ATTACHMENT

ENGINEER OF RECORD VERIFY WALL CAN SUPPORT SUNSHADE LOADS:

DESIGN LOAD: 57 psf

GROUND SNOW LOAD: 50 psf
-See maps where these calculations do not apply.

WIND SPEED: 120 mph
-See maps where these calculations do not apply.

ANCHORAGE IS BASED ON 30" PROJECTION.

MAXIMUM LENGTH OF SUNSHADE: 60"

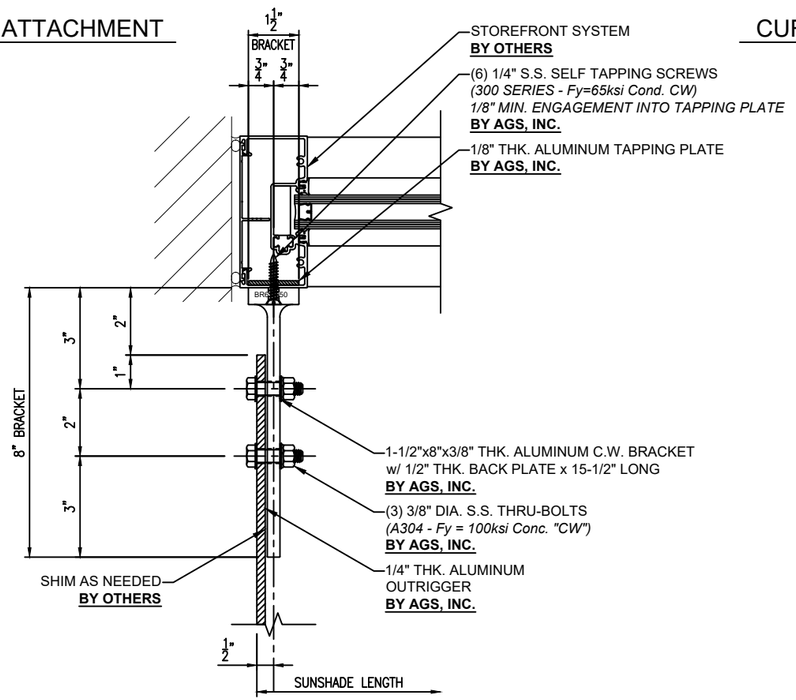

STOREFRONT ATTACHMENT

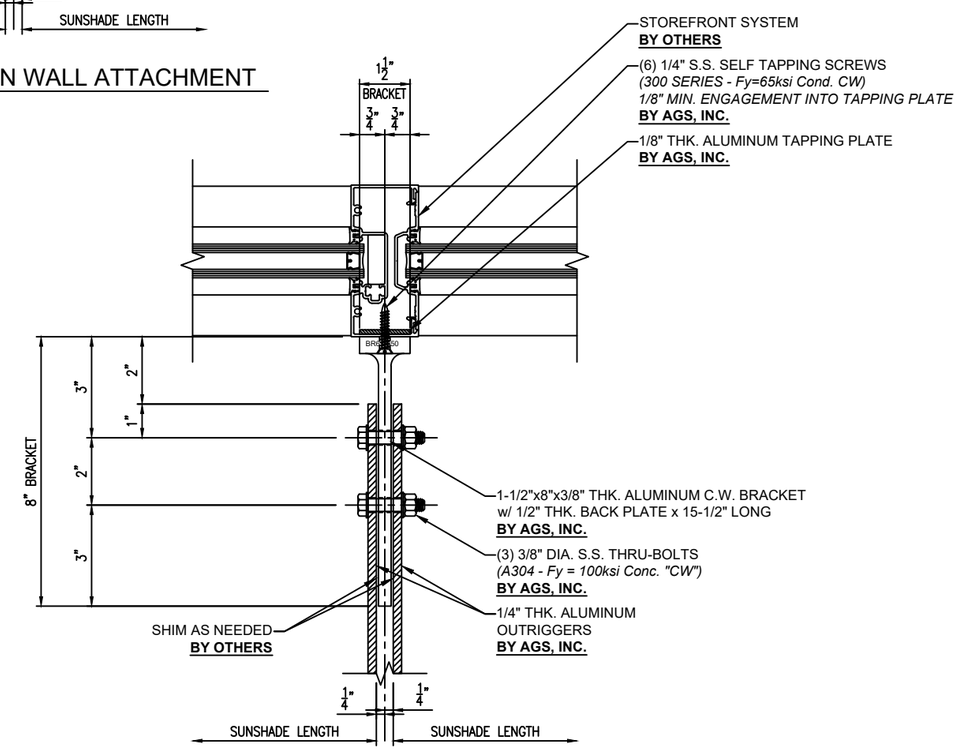

STOREFRONT ATTACHMENT

REV. NO.	DATE	BY
5		
4		
3		
2		
1		

AGS Inc.
22442 S. Fey Drive
Frankfort, IL 60423
Ph: (708) 479-9458 Fax: (708) 479-9478
www.agsshade.com
Architectural Grilles & Sunshades, Inc.

PROJECT NAME:
LOCATION:
ARCHITECT:
LOCATION:
CONTRACTOR:
LOCATION:
REPRESENTATIVE:
LOCATION:
AGS, INC. PROJECT MANAGER:

SHEET NAME
ATTACHMENT DETAIL SHEET

JOB NUMBER

FINISH

SCALE: 6" = 1'-0"
DATE
DRAWN BY: JRW
SHEET NO.: 02-02